LIGHTING/SWITCHING SYMBOLS

- LIGHTING CONTROL PANEL, SEE CONTROL DETAIL AND SCHEDULES FOR MORE INFORMATION.
- PUSH BUTTON LOW VOLTAGE OVERRIDE CONTROL SWITCH
- ZONE CONTROLLED (UPPER CASE LETTER DENOTES ZONE CONTROLLED)
- A B — SWITCH LEG CONTROLLED (LOWER CASE LETTER DENOTES SWITCH LEG CONTROLLED)
- 5a5b — SWITCH, SINGLE POLE 20A, MTD. 48" AFF TO TOP. DESIGNATION TO CONTROL LIGHTING IN CIRCUIT LEGS. DEVICE: WHITE COVERPLATE: WHITE
  2- DOUBLE POLE K - KEYED SWITCH
  3- THREE WAY T - MANUAL MOTOR STARTER WITH THERMAL OVERLOADS
  4- FOUR WAY D - LOAD RATED DIMMER
  PL - PILOT LIGHT PB - PUSHBUTTON
- WALL MOUNTED MOTION CONTROLLED LIGHTING SWITCH WITH INTEGRAL BI-LEVEL SWITCHING. DEVICE - WHITE MTD. 48" AFF TO TOP.
- CEILING MOUNTED ULTRASONIC MOTION SENSOR. DEVICE: WHITE
- WALL MOUNTED DUAL-TECHNOLOGY MOTION SENSOR. DEVICE: WHITE
- 1-100-A — FIXTURE CALLOUT:
  TYPE (SEE LIGHT FIXTURE SCHEDULE)
  WATTAGE
  QUANTITY
- R — RELAY
- TC — TIME CLOCK
- P — PHOTOCELL
- EPO — EMERGENCY POWER OFF PUSHBUTTON, MOUNTED AT +48" UON.

TEL/DATA SYMBOLS

- DATA OUTLET WITH TRIM RING, PULLSTRING TO ACCESSIBLE CEILING SPACE. +18" A.F.F. TO CENTER.
- TELEPHONE OUTLET WITH TRIM RING, PULLSTRING TO ACCESSIBLE CEILING SPACE. +18" A.F.F. TO CENTER.
- TELECOMMUNICATIONS OUTLET WITH TRIM RING, PULLSTRING TO ACCESSIBLE CEILING SPACE +18" A.F.F. TO CENTER.
- TELECOMMUNICATION OUTLET FLUSH FLOOR MOUNTED ON FIRE RATED POKE-THRU.
- SPEAKER BACK BOX LOCATION
- INTERCOM J-BOX LOCATION
- ELECTROMAGNETIC DOOR HOLDER
- INTERCOM LOCATION
- CARD READER
- ELECTRIC DOOR STRIKE
- 3/4" FIRE RATED PLYWOOD BACKBOARD WITH #6AWG GROUND TO BUILDING SYSTEM GROUND.
- CABLE TRAY PER PLANS. COORDINATE ROUTING WITH OTHER DISIPLINES.

GENERAL NOTES

1. ALL ELECTRICAL DEVICES AND UTILIZATION EQUIPMENT SHALL BE LISTED BY AN APPROVED TESTING AGENCY.
2. ALL WORK TO COMPLY WITH THE LATEST EDITION OF THE CALIFORNIA ELECTRICAL CODE AS AMENDED AND ADOPTED BY THE CITY OF PALM SPRINGS, 2007 CEC
3. THERMOSTATS, SWITCHES AND/OR RECEPTACLES INSTALLED IN RESTROOMS OR OTHER AREAS EQUIPPED FOR THE DISABLED, SHALL BE LOCATED AT NOT TO EXCEED 48" TO CENTER OF DEVICE FROM THE FLOOR.
4. CONTRACTOR IS TO VERIFY MOUNTING HEIGHTS OF ALL DEVICES PRIOR TO MOUNTING
5. VERIFY ROUTING OF ANY SURFACE MOUNTED CONDUITS PRIOR TO INSTALLATION
6. REVIEW ALL PLANS BY OTHER TRADES AND PROVIDE ADDITIONAL WORK AS REQUIRED NOT OUTLINED IN THESE DOCUMENTS
7. VERIFY CABLE REQUIRED WITH OWNER VENDOR CONTRACTOR TO PROVIDE BID ALLOWANCE FOR CABLES.
8. FLOOR BOXES SHALL BE WALKER OMNIBOX CAST IRON SERIES WITH BRUSHED ALUMINUM COVERS.

POWER SYMBOLS

- JUNCTION BOX
- WALL MOUNTED JUNCTION BOX.
- DUPLEX RECEPTACLE MTD 18" AFF TO CENTER COVERPLATE COLOR: WHITE

DEVICE TYPE		DEVICE COLOR
STANDARD		WHITE
IG	ISOLATED GROUND	ORANGE
D	DEDICATED 20A RATED	GRAY
UPS	15A OR 20A UPS	GRAY
EM	EMERGENCY	RED

- GFI DUPLEX RECEPTACLE MTD 18" AFF TO CENTER COVERPLATE COLOR: WHITE
- DOUBLE DUPLEX RECEPTACLE MTD 18" AFF TO CENTER, SCHEDULE AS NOTED ABOVE.
- SPLIT WIRED 15A 1/2 HOT, 1/2 SWITCHED OUTLET COLOR: WHITE
- 208V/1Ø RECEPTACLE, NEMA CONFIGURATION AS NOTED.
- 208V/3Ø RECEPTACLE, NEMA CONFIGURATION AS NOTED.
- FLUSH FLOOR MOUNTED DUPLEX RECEPTACLE.
- FLOOR BOX WITH DOUBLE DUPLEX RECEPTACLE AND SINGLE GANG TEL/DATA RECEPTACLE.
- FLOOR BOX WITH DUPLEX RECEPTACLE AND SINGLE GANG TEL/DATA RECEPTACLE.
- SPECIALTY FLOOR BOX PER PLANS MULTIPLE GANG BOX, SEE SPECS.
- P — PEDESTAL MOUNTED DOUBLE DUPLEX RECEPTACLE MANUF: HUBBELL SA6688 W/STAINLESS STEEL COVERPLATES
- P — PEDESTAL MOUNTED DUPLEX RECEPTACLE MANUF: HUBBELL#SA6688 W/STAINLESS STEEL COVERPLATES
- WP — ROOF MOUNTED WEATHERPROOF GFI WORK OUTLET. PROVIDE CAST BOX W/STAINLESS STEEL WP COVER.
- EPO — EXTERNALLY OPERATED FUSED DISCONNECT SWITCH. PROVIDE PER NEMA RATING REQUIRED.
- EPO — COMBINATION FVNR MAGNETIC MOTOR STARTER AND DISCONNECT RATING AND POLES AS INDICATED. PROVIDE WITH OVERLOAD PER HORSEPOWER REQUIREMENTS, CPT, H.O.A. WITH PILOT LIGHTS, PROVIDE WITH (1) EACH N.O. AND N.C. AUX CONTACTS.
- FVNR MAGNETIC STARTER WITH OVERLOAD PER HORSEPOWER REQUIREMENTS, CPT, H.O.A. WITH PILOT LIGHTS, PROVIDE WITH (1) EACH N.O. AND N.C. AUX CONTACTS.
- MOTOR PROVIDED BY OTHERS.
- FLUSH MOUNTED PANELBOARD
- SURFACE MOUNTED PANELBOARD
- SURFACE MOUNTED LIGHTING CONTROL PANEL, U.O.N.
- FLUSH MOUNTED LIGHTING DIMMING PANEL, U.O.N.
- FIRE RATED DOUBLE DUPLEX POKE THROUGH, SEE DETAILS FOR MORE INFORMATION.
- FIRE RATED SYSTEMS FURNITURE FEED POKE THROUGH, SEE DETAILS FOR MORE INFORMATION.
- CLOCK HANGER OUTLET ONLY, MOUNTED AT +__" U.O.N.
- TV — TELEVISION SYSTEM OUTLET WITH JACK, WALL MOUNTED AT +12" U.O.N.
- MULTI-OUTLET ASSEMBLY, LENGTH AS INDICATED ON PLANS.
- FLEXIBLE CONDUIT
- WIRING OR CONDUIT CONCEALED IN WALL OR CEILING
- WIRING OR CONDUIT EXPOSED
- WIRING OR CONDUIT CONCEALED UNDERGROUND OR IN FLOOR
- RACEWAY OR WIREWAY ASSEMBLY DOWN
- RACEWAY OR WIREWAY ASSEMBLY UP
- HOMERUN TO PANEL, CIRCUITS AS INDICATED.
- UNDERGROUND HOMERUN TO PANEL, CIRCUITS AS INDICATED.
- CONCEALED EMT CONDUIT WITH THHN WIRE 2#12 AWG 3/4" C. MINIMUM
- CONCEALED EMT CONDUIT WITH THHN WIRE 3#12 AWG 3/4" MINIMUM. CHEVRONS INDICATE #10 CONDUCTORS
- FUSED SWITCH, SEE SINGLE LINE DIAGRAM FOR MORE INFORMATION.
- CIRCUIT BREAKER, SEE SINGLE LINE DIAGRAM FOR MORE INFORMATION.
- TRANSFORMER, SEE SINGLE LINE DIAGRAM FOR MORE INFORMATION.
- CURRENT TRANSFORMER
- AUTOMATIC TRANSFER SWITCH
- GROUNDING ELECTRODE
- +18" A.F.F. — STANDARD MOUNTING HEIGHT FOR ALL DEVICES, U.O.N.
- SPEAKER, SEE DESIGN BUILD SPEC

ABBREVIATIONS

A	AMPERES
AC	ALTERNATING CURRENT
AIC	AMPERES INTERRUPTING CAPACITY
AFF	ABOVE FINISHED FLOOR
AFG	ABOVE FINISHED GRADE
AF	AMP FRAME/AMP FUSE
AL	ALUMINUM
ARCH	ARCHITECT OR ARCHITECTURAL
AS	AMP SWITCH
AT	AMP TRIP
ATS	AUTOMATIC TRANSFER SWITCH
AUX	AUXILIARY
AWG	AMERICAN WIRE GAUGE
BKBD	BACKBOARD
C	CONDUIT WITH WIRE
CATV	CABLE TELEVISION
CCTV	CLOSED CIRCUIT TELEVISION
CB	CIRCUIT BREAKER
CLF	CURRENT LIMITING FUSE
C.O.	CONDUIT ONLY WITH NYLON PULL CORD
CONTR	CONTRACTOR
CU	COPPER
CT	CURRENT TRANSFORMER
CW	COLD WATER
D	DEDICATED OUTLET
DC	DIRECT CURRENT
DF	DRINKING FOUNTAIN
DIA	DIAMETER
DISC	DISCONNECT
DIST	DISTRIBUTION
DWGS	DRAWINGS
EA	EACH
EB	90-MINUTE BATTERY CONNECTED TO UNIT
EC	ELECTRICAL CONTRACTOR
EG	EMERGENCY GENERATOR CONNECTION
EF	EXHAUST FAN
ELECT	ELECTRICAL
ELEV	ELEVATION/ELEVATOR
EMT	ELECTRO-METALLIC TUBING
EXIST	EXISTING
FA	FIRE ALARM
FC	FOOT CANDLE
FIXT	FIXTURE
FLUOR	FLUORESCENT
FT.	FEET OR FOOT
GC	GENERAL CONTRACTOR
GD	GARBAGE DISPOSAL
GEN	GENERATOR
GFI	GROUND FAULT INTERRUPTER
GFR	GROUND FAULT RELAY
GRD	GROUND
H	HORIZONTAL
HID	HIGH INTENSITY DISCHARGE
HP	HORSEPOWER
HPS	HIGH PRESSURE SODIUM
HR	HOUR
HT	HEIGHT
HZ	HERTZ
IG	ISOLATED GROUND BUS OR WIRE
IMC	INTERMEDIATE METAL CONDUIT
INCAND	INCANDESCENT
J-BOX	JUNCTION BOX
KVA	KILO-VOLTAMPERE
KW	KILO-WATT
KWH	KILOWATT-HOUR
LF	LINEAL FEET
LTG	LIGHTING
LV	LOW VOLTAGE
MANUF	MANUFACTURER
MAX	MAXIMUM
MC	MECHANICAL CONTRACTOR
MCC	MOTOR CONTROL CENTER
MECH	MECHANICAL
MIN	MINIMUM
MH	METAL HALIDE
MLO	MAIN LUGS ONLY
MTG	MOUNTING
MV	MERCURY VAPOR
N	NEUTRAL
NEC	NATIONAL ELECTRIC CODE
NIC	NOT IN CONTRACT
NL	NIGHT LIGHT
NTS	NOT TO SCALE
OC	ON CENTER
OFCI	OWNER FURNISHED CONTRACTOR INSTALLED
OFOI	OWNER FURNISHED OWNER INSTALLED
P	PEDESTAL MOUNT
PB	PULL BOX
PC	PHOTOCELL CONTROL
PCTC	PHOTOCELL/TIMECLOCK CONTROL
PH	PHASE
PIV	POST INDICATING VALVE
PL	PILOT LIGHT
PVC	POLYVINYL CHLORIDE
PWR	POWER
PP	POWER POLE
QR	FIXTURE WITH QUARTZ RESTRIKE
QTY	QUANTITY
RECEPT	RECEPTACLE
REF	REFRIGERATOR
RGS	RIGID GALVANIZED STEEL
SD	SMOKE DETECTOR
SPEC	SPECIFICATION
SQ FT	SQUARE FEET OR SQUARE FOOT
SW	SWITCH
SWBD	SWITCHBOARD
TEMP	TEMPERATURE OR TEMPORARY
TV	TELEVISION
TEL, TELE	TELEPHONE
TC	TIME CLOCK
TRANSF	TRANSFORMER
TYP	TYPICAL
UGPS	UNDERGROUND PULL SECTION
UL	UNDERWRITERS LABORATORIES
UNO	UNLESS NOTED OTHERWISE
UPS	UNINTERRUPTIBLE POWER SUPPLY
V	VOLTS
VA	VOLT-AMPERE
WH	WATER HEATER
WP XFMR	WEATHER PROOF TRANSFORMER

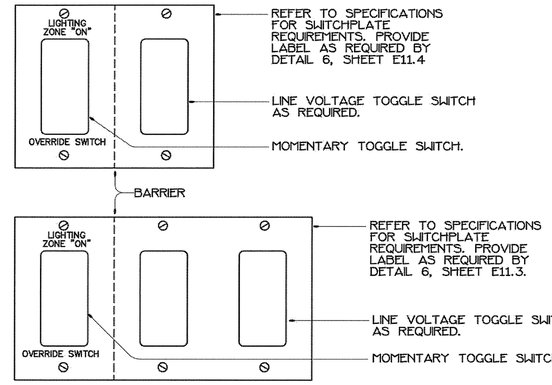

NOTES:

1. PROVIDE PERMANENTLY INSTALLED BARRIERS BETWEEN SWITCHES WHEN VOLTAGE BETWEEN ADJACENT SWITCHES EXCEED 300 VOLTS PER CEC 380-8(b).
2. PROVIDE ENGRAVED COVERPLATES NAMING AREAS CONTROLLED BY THE ASSOCIATED SWITCHES. SEE SHEET E3.1 AND E3.2. LETTERING SHALL BE 3/16" TALL, ENGRAVED INTO COVERPLATE, WITH ENGRAVED CHARACTERS PAINTED TO CONTRAST COVERPLATE COLOR. COLORS TO BE DETERMINED BY THE ARCHITECT.

LIGHTING CONTROL SWITCH COVER PLATE DETAILS

NO SCALE

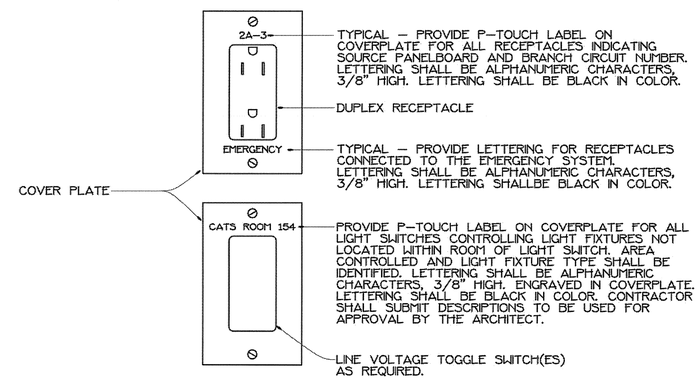

NOTE:
SEE SPECIFICATIONS FOR DEVICE AND COVER PLATE TYPES.

DEVICE COVERPLATE LABELING REQUIREMENTS

NO SCALE

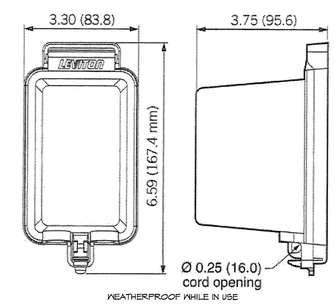

WEATHERPROOF WHILE IN USE

WEATHERPROOF RECEPTACLE DETAIL

NO SCALE

REGISTERED PROFESSIONAL ENGINEER — GERALD L. GREEN — No. E015691 Exp. 06-30-10 — ELECTRICAL — STATE OF CALIFORNIA

KRUSE & ASSOCIATES
12245 WORLD TRADE DRIVE, STE. A
SAN DIEGO, CALIFORNIA 92128
(858) 676-9776
FAX #676-9744

SWATT | MIERS ARCHITECTS
5845 Doyle Street,
Suite 104
Emeryville, CA 94608
Tel: 510 985 9779
Fax: 510 985 0116
www.swattmiers.com

RECEIVED JAN 19 2010

Not for Construction

BID SET

PREVAILING WAGE JOB

PALM SPRINGS ANIMAL CARE FACILITY

4575 E. MESQUITE AVE.
PALM SPRINGS, CA 92262

CITY OF PALM SPRINGS
PROJECT NO. CP. 07-24

APN: 680-020-010

Issue

Rev	Date	By	Description
1	11/23/09		BLDG. PERMIT SET
2	01/18/10		BID SET

Drawn By
Checked By
Job No.
Issue Date
Scale NTS

Reference North

Drawing Title
SYMBOLS LIST

E0.1

Sheet

These plans, drawings and specifications are the property of Swatt | Miers Architects and any use and/or reuse thereof in part or in whole without the written permission of the Architect is prohibited. Copyright 2009 Swatt | Miers Architects