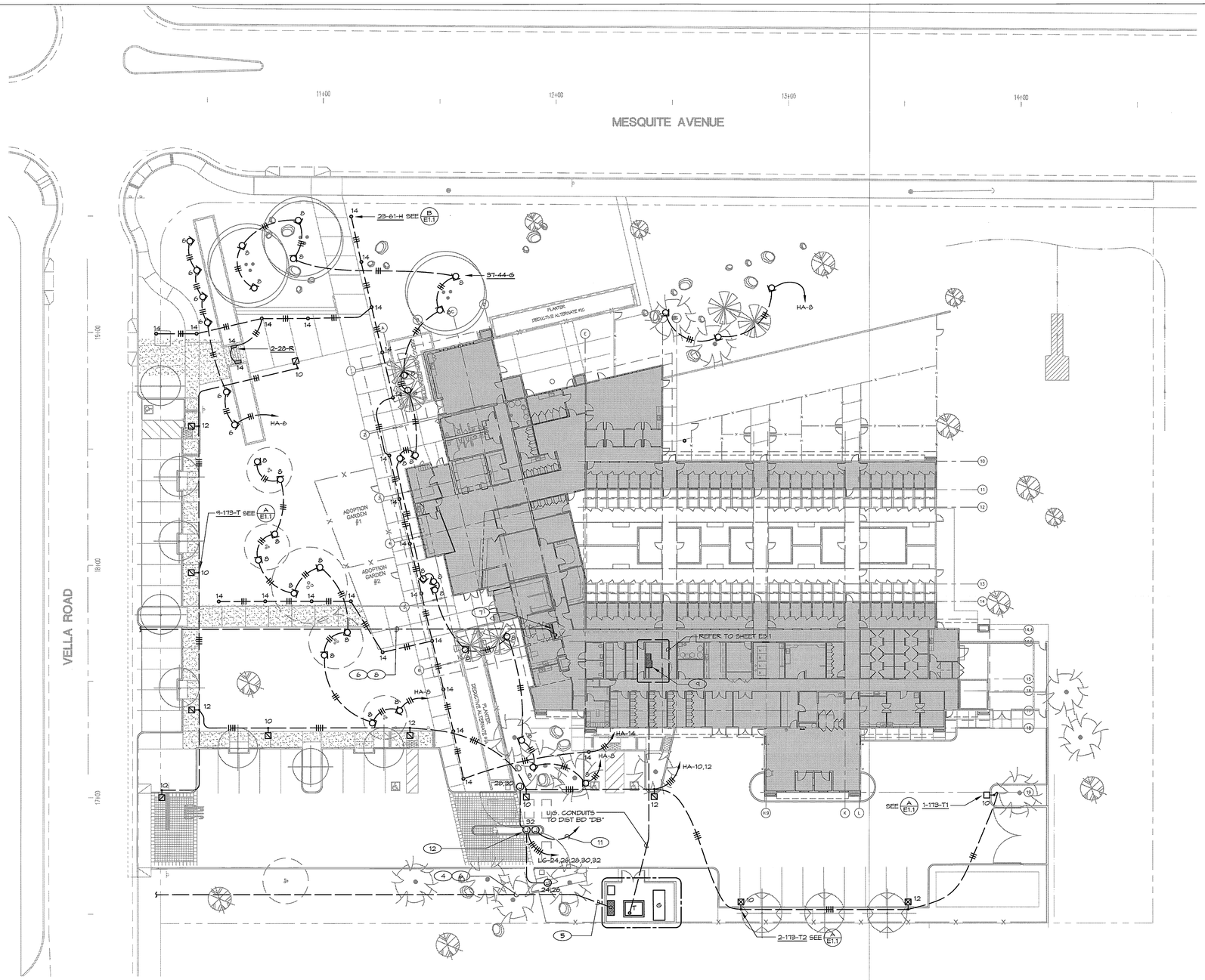

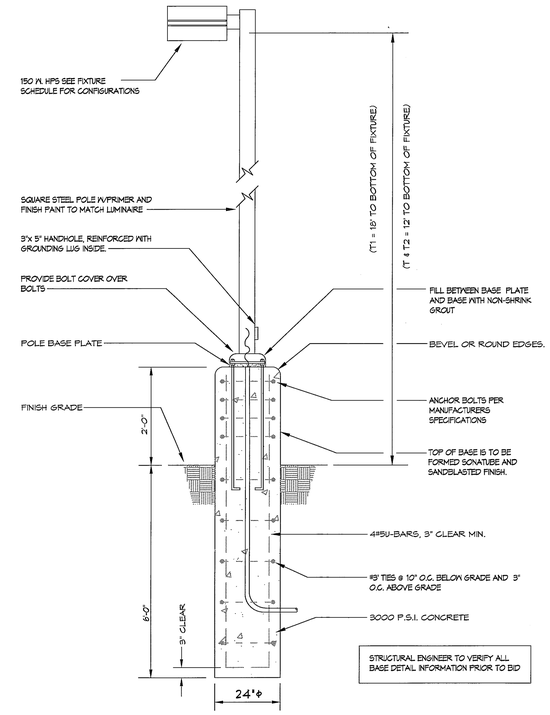

PARKING FIXTURE DETAIL

A E1.1

NO SCALE

NOTES:

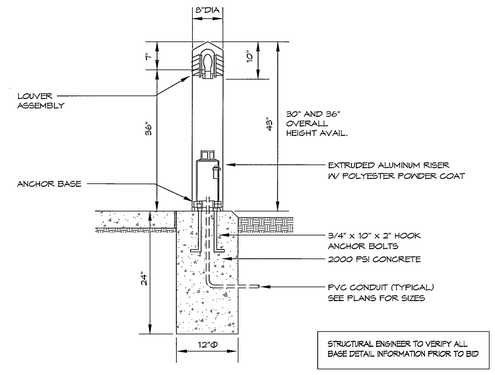

BOLLARD FIXTURE DETAIL

B E1.1

NO SCALE

NOTES:

1. SO. CAL. EDISON TRANSFORMER. PROVIDE PAD AND GROUNDING.
2. EMERGENCY GENERATOR, DEDUCTIVE ALTERNATE #2
3. MAIN SWITCHBOARD "MS" 1600A., 120/208V., 3Ø., NEMA 3R
4. (6)4" PVC. C.O. (SECONDARY), COORDINATE WITH UTILITY COMPANY.
5. (1)4" PVC. C.O. (PRIMARY), COORDINATE WITH UTILITY COMPANY.
6. VERIFY EXACT POINT OF SERVICE.
7. MAIN TELEPHONE TERMINAL BOARD "MTTB".
8. (2) 4" PVC. C.O. (TELEPHONE).
9. DISTRIBUTION BOARD "DB" 800A., 277/480V., 3Ø.
10. AUTOMATIC TRANSFER SWITCH "ATS", DEDUCTIVE ALTERNATE #2
11. 1" C.O. TO DISPATCH ROOM
12. GATE CONTROLLER EQUIPMENT. INFORMATION NOT AVAILABLE AT TIME OF DESIGN. VERIFY REQUIREMENTS WITH MANUFACTURER.
13. POWER FOR IRRIGATION CONTROLLER.
14. POWER FOR BATTERY CHARGER AT GENERATOR.

UTILITIES:

ELECTICAL : SOUTHERN CALIFORNIA EDISON
PHONE: 1-800-490-7788

TELEPHONE: VERIZON CALIFORNIA, INC
PHONE: 1-800-483-5000

CABLE: TIME WARNER CABLE
PHONE: 760-340-1312

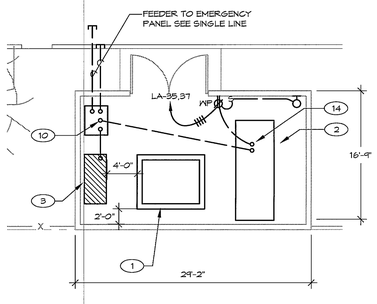

ELECTRICAL ENCLOSURE

C E1.1

SCALE: 1/8" = 1'-0"

SWATT | MIERS ARCHITECTS

5845 Doyle Street,
Suite 104
Emeryville, CA 94608
Tel: 510 985 9779
Fax: 510 985 0116
www.swattmiers.com

Not for Construction

PALM SPRINGS ANIMAL CARE FACILITY

4575 E. MESQUITE AVE.
PALM SPRINGS, CA 92262

CITY OF PALM SPRINGS
PROJECT NO. CP. 07-24

APN: 680-020-010

Issue

Rev	Date	By	Description
1	11/23/09		BLDG. PERMIT SET
2	01/18/10		BID SET

Drawn By
Checked By
Job No.
Issue Date
Scale 1" = 20'-0"

Reference North
Drawing Title

SITE ELECTRICAL PLAN

BID SET

PREVAILING WAGE JOB

JAN 19 2010

REGISTERED PROFESSIONAL ENGINEER
GERALD L. GRZEZIK
No. E015691
Exp. 06-30-10
ELECTRICAL
STATE OF CALIFORNIA

KRUSE & ASSOCIATES
12245 WORLD TRADE DRIVE, STE. A
SAN DIEGO, CALIFORNIA 92128
(858) 676-9776
FAX #676-9744

Sheet

E1.1

These plans, drawings and specifications are the property of Swatt | Miers Architects and may not be used or reproduced in part or in whole without written permission of the Architect in accordance with Copyright 2009 Swatt | Miers Architects