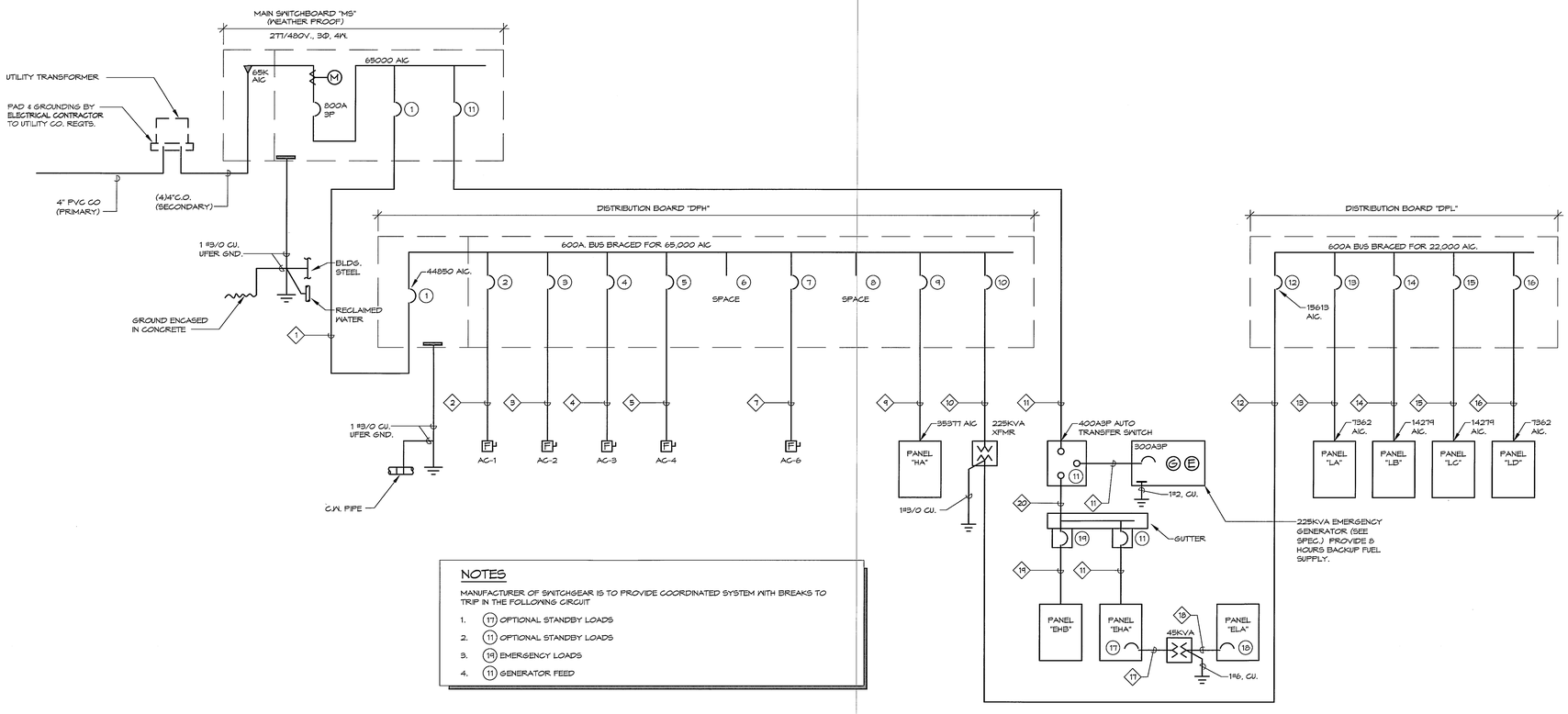

NOTES

MANUFACTURER OF SWITCHGEAR IS TO PROVIDE COORDINATED SYSTEM WITH BREAKS TO TRIP IN THE FOLLOWING CIRCUIT

1. (17) OPTIONAL STANDBY LOADS
2. (11) OPTIONAL STANDBY LOADS
3. (14) EMERGENCY LOADS
4. (11) GENERATOR FEED

SINGLE LINE DIAGRAM - NO SCALE

FEEDER SCHEDULE

DEVICE NUMBER	C.B. OR S.W. SIZE	FUSE SIZE	FUSE TYPE	FEEDER NUMBER	CONDUITS & CONDUCTORS							
					CONDUIT TYPE	CONDUIT SIZE	CNDCTR. QUANTITY	CNDCTR. SIZE	CNDCTR. TYPE	GND. CU.	LENGTH	0/0 V.D.
1	600A3P	-	-	1	PVC.	(2)4"	4 (EA)	400 MCM	CU.	3/0	120'	.5
2	30A3P	-	-	2	EMT	3/4"	3	10	CU.	12	160'	1.4
3	100A3P	-	-	3	EMT	1 1/2"	3	2	CU.	6	148'	.5
4	70A3P	-	-	4	EMT	1 1/2"	3	2	CU.	6	136'	.5
5	70A3P	-	-	5	EMT	1 1/2"	3	2	CU.	6	30'	.1
6	-	-	-	6	-	-	-	-	-	-	-	-
7	50A3P	-	-	7	EMT	1 1/2"	3	2	CU.	6	50'	.1
8	-	-	-	8	-	-	-	-	-	-	-	-
9	100A3P	-	-	9	EMT	1 1/2"	4	2	CU.	6	15'	.1
10	300A3P	-	-	10	PVC	4"	3	350 MCM	CU.	2	8'	.1
11	300A3P	-	-	11	PVC	4"	4	350 MCM	CU.	2	110'	1.1
12	600A3P	-	-	12	PVC	(2)4"	4 (EA)	350 MCM	CU.	3/0	10'	.1
13	200A3P	-	-	13	PVC	2"	4	3/0	CU.	4	120'	1.1
14	200A3P	-	-	14	PVC	2"	4	3/0	CU.	4	10'	.1
15	200A3P	-	-	15	PVC	2"	4	3/0	CU.	4	10'	.1
16	200A3P	-	-	16	PVC	2"	4	3/0	CU.	4	120'	1.1
17	70A3P	-	-	17	PVC	1 1/2"	3	4	CU.	8	10'	.1
18	150A3P	-	-	18	PVC	2"	4	1/0	CU.	6	10'	.1
19	60A3P	-	-	19	PVC	2"	4	4	CU.	8	120'	.5
20	-	-	-	20	EMT	4"	4	350 MCM	CU.	2	1'	.001

SINGLE LINE DIAGRAM NOTES

1. VERTICAL BUS MAY BE TAPERED TO NOT LESS THAN 1/3 THE AMPACITY RATING OF THE MAIN HORIZONTAL BUS.
2. HORIZONAL AND VERTICAL BUS SHALL BE FULL LENGTH, AND BE RATED NO LESS THAN THE NOTED AIC RATED VALUE.
3. CONTRACTOR SHALL SUBMIT SWITCHBOARD SHOP DRAWINGS TO THE SERVING UTILITY FOR APPROVAL PRIOR TO FABRICATION. SWITCHBOARD SHALL COMPLY WITH SDG-1E REQUIREMENTS.
4. CONTRACTOR TO SUBMIT 1/4" PLAN TO ENGINEER OF PROPOSED SWITCHGEAR LAYOUT TO CONFORM WITH MANUFACTURER'S SHOP DRAWINGS. SHOP DRAWING TO BE SUBMITTED AND APPROVED PRIOR TO UNDERGROUND ROUGH-IN.
5. ALL CONDUCTORS FEEDING PANELBOARDS SHALL BE COPPER TYPE 'THWN' WITH EMT CONDUIT. BRANCH CIRCUIT AND FEEDER CABLES IN ALL SIZES SHALL HAVE 'THW, 'THHN' OR 'THWN' INSULATION WITH EMT CONDUIT. AC CABLE IS NOT ALLOWED TO BE INSTALLED. A EQUIPMENT GROUND CONDUCTOR SHALL BE IN ALL FLEXIBLE CONDUITS. 'XHHW' TO BE USED AT ALL EXTERIOR LOCATION PANEL FEEDERS. PROVIDE NEC REQUIRED SEALS AT ALL HAZARDOUS LOCATIONS.
6. ALL EQUIPMENT SHOWN IS NEW UNLESS NOTED OTHERWISE.
7. EACH TRANSFORMER SHALL USE THE NEAREST ELECTRODE AS THE SECONDARY GROUNDING SYSTEM. (I.E. BUILDING STEEL, COLD WATER PIPE.)
8. ALL TERMINATION LUGS OF PANELS AND SWITCHBOARDS TO BE RATED TO ACCEPT 75 DEGREE CONDUCTORS.
9. THE CONTRACTOR SHALL PROVIDE A SERIES RATED SYSTEM TO ENSURE THAT ALL ELECTRICAL COMPONENTS OF THIS SYSTEM EXCEED THE MAXIMUM SHORT CIRCUIT WITHSTAND RATING AVAILABLE. PROVIDE ENGRAVED PHENOLIC NAMEPLATES ON ALL SWITCHBOARDS AND PANELBOARDS TO DENOTE THE USE OF SERIES RATED DEVICES. OVERCURRENT DEVICE ENCLOSURES WILL BE IDENTIFIED AS SERIES-RATED AND LABELED IN ACCORDANCE WITH NEC 110-22. THE OVERCURRENT DEVICES SHALL BE AIC RATED PER MANUFACTURERS' LABELING OF THE ELECTRICAL EQUIPMENT.
10. ALL MAIN SERVICE CIRCUIT BREAKERS SHALL BE 100% RATED.
11. SERVICE GROUND FAULT SHALL BE TESTED AS PER SAN DIEGO AREA ELECTRICAL NEWSLETTER 230-95. MAIN SERVICE SHALL NOT BE ENERGIZED PRIOR TO BUILDING INSPECTORS' RECEIPT OF A THIRD PARTY NRTL TESTING LABORATORY PERFORMANCE TEST CERTIFICATION FOR THE SERVICE GROUND FAULT.
12. FOR ALL PANELBOARDS SUPPLYING FIRE ALARM EQUIPMENT, PROVIDE LOCKABLE COVER, INDENTIFIED CIRCUIT BREAKER (RED), AND A BREAKER 'LOCK-OFF' DEVICE.
13. PULL SECTION TAPS ARE TO BE FACTORY INSTALLED, FIELD INSTALLED PER FACTORY SPECIFICATIONS OR TO BE CERTIFIED BY A NRTL CERTIFIED THIRD PARTY TESTING LABORATORY.

LOAD SUMMARY

DISTRIBUTION BOARD "DPL"

PANEL "LA"	34880 W.
PANEL "LB"	31550 W.
PANEL "LC"	48558 W.
PANEL "LD"	13700 W.
TOTAL LOAD	133088 W. = 369 AMPS @ 120/208V., 3Ø., 4W.

DISTRIBUTION BOARD "DBH"

AC-1	14626 W.
AC-2	53844 W.
AC-3	40553 W.
AC-4	35234 W.
AC-6	34510 W.
PANEL "HA"	20513 W.
DIST. BD "DPL"	133088 W.
TOTAL LOAD	332433 W. = 400 AMPS @ 277/480V., 3Ø., 4W.

MAIN SWITCHBOARD "MS"

DIST. BOARD "DPH"	332433 W.
PANEL "EHA"	101391 W.
PANEL "EHB"	5048 W.
TOTAL LOAD	438872W. = 528 AMPS @ 277/480V., 3Ø., 4W.

REGISTERED PROFESSIONAL ENGINEER
GERALD L. GRIEZE
No. E015691
Exp. 06-30-10
ELECTRICAL
STATE OF CALIFORNIA

KRUSE & ASSOCIATES
12245 WORLD TRADE DRIVE, STE. A
SAN DIEGO, CALIFORNIA 92128
(858) 676-9776
FAX #676-9744

SWATT | MIERS ARCHITECTS
5845 Doyle Street,
Suite 104
Emeryville, CA 94608
Tel: 510 985 9779
Fax: 510 985 0116
www.swattmiers.com

RECEIVED JAN 19 2010

Not for Construction

PREVAILING WAGE JOB

BID SET

PALM SPRINGS ANIMAL CARE FACILITY

4575 E. MESQUITE AVE.
PALM SPRINGS, CA 92262

CITY OF PALM SPRINGS
PROJECT NO. CP. 07-24

APN: 680-020-010

Issue

Rev	Date	By	Description
1	11/23/09		BLDG. PERMIT SET
2	01/18/10		BID SET

Drawn By
Checked By
Job No.
Issue Date
Scale NTS

Reference North
Drawing Title

SINGLE LINE DIAGRAM

E5.2

Sheet

These plans, drawings and specifications are the property of Swatt | Miers Architects and any use and/or reuse thereof in part or in whole without the written permission of the Architect is prohibited. Copyright 2009 Swatt | Miers Architects